TEA-256-04

- **Sepcification**
- .453" PCB Barrier Terminal Blocks
- Terminal style : 56
- Pitch : 11.50 mm

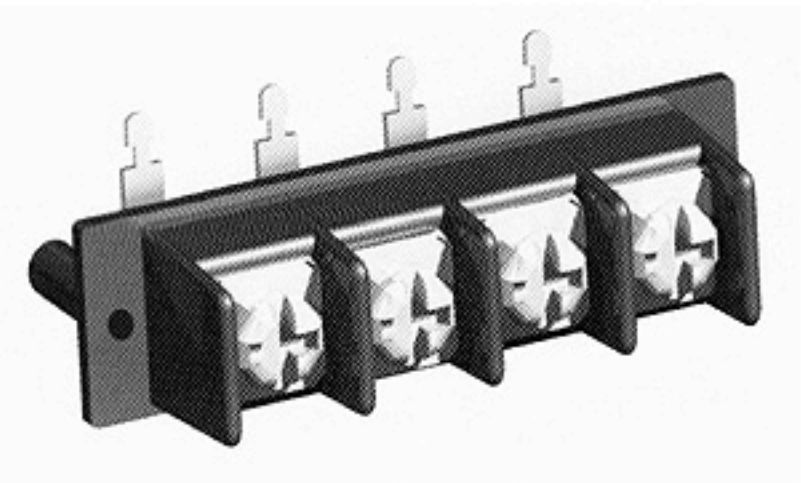

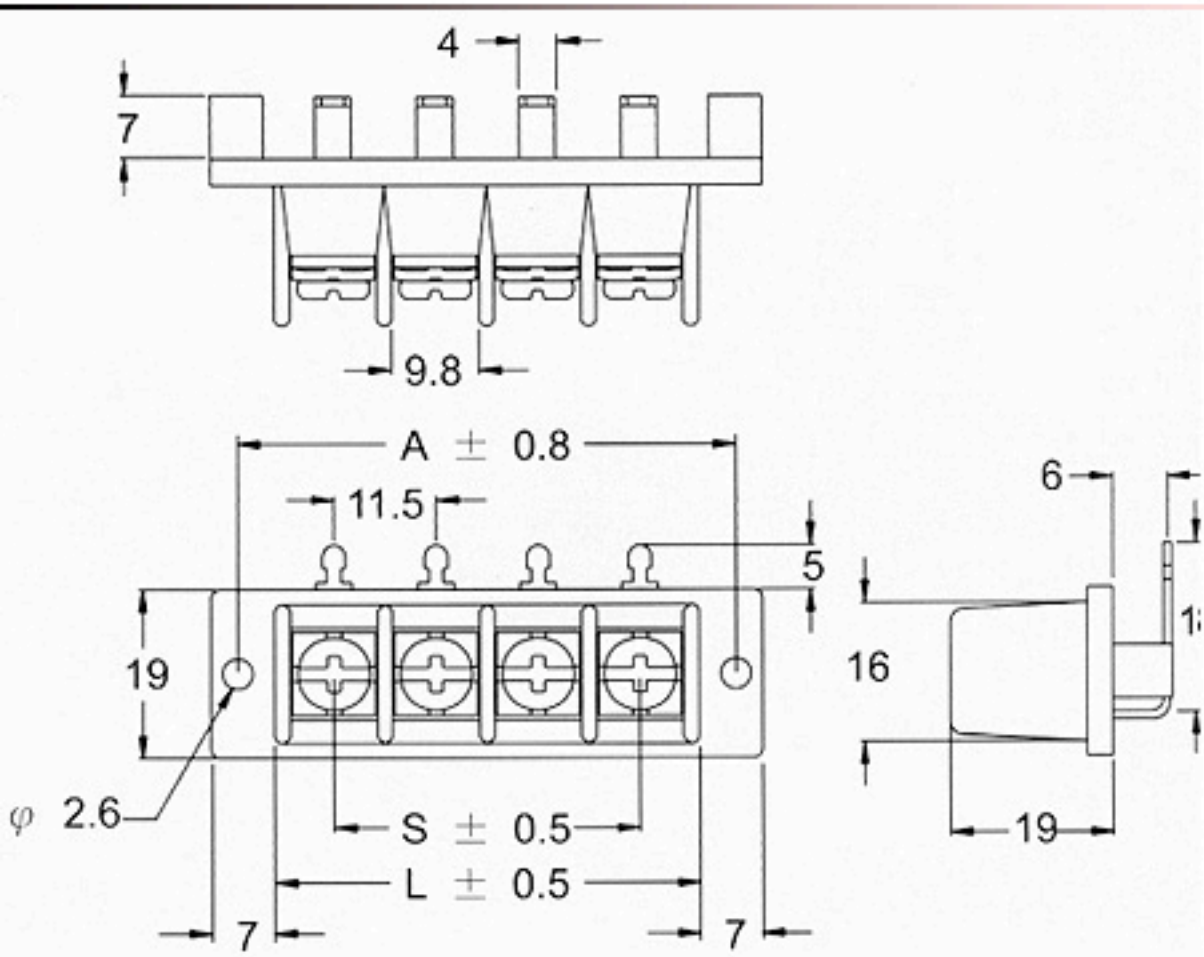

Poles	3	4	7	8											
A(mm)	44.5	56.0	90.5	102											
L(mm)	36.5	48.0	82.5	94.0											
S(mm)	23.0	34.5	69.0	80.5											